AL/CF-TR-1994-0139

DTIC
ELECTE
JUL 1 4 1995
S D
F

ARMSTRONG LABORATORY

THE USE OF VIRTUAL FIXTURES TO ENHANCE OPERATOR PERFORMANCE IN TIME DELAYED TELEOPERATION

Louis B. Rosenberg

CREW SYSTEMS DIRECTORATE
BIODYNAMICS AND BIOCOMMUNICATIONS DIVISION
WRIGHT-PATTERSON AFB OH 45433-7901

19950710 043

MARCH 1993

FINAL REPORT FOR THE PERIOD JULY 1992 TO SEPTEMBER 1992

Approved for public release; distribution is unlimited

DTIC QUALITY INSPECTED 5

AIR FORCE MATERIEL COMMAND
WRIGHT-PATTERSON AIR FORCE BASE, OHIO 45433-7901

NOTICE

When US Government drawings, specifications, or other data are used for any purpose other than a definitely related Government procurement operation, the Government thereby incurs no responsibility nor any obligation whatsoever, and the fact that the Government may have formulated, furnished, or in any way supplied the said drawings, specifications, or other data, is not to be regarded by implication or otherwise, as in any manner, licensing the holder or any other person or corporation, or conveying any rights or permission to manufacture, use or sell any patented invention that may in any way be related thereto.

Please do not request copies of this report from the Armstrong Laboratory. Additional copies may be purchased from:

National Technical Information Service
5285 Port Royal Road
Springfield VA 22161

Federal Government agencies and their contractors registered with Defense Technical Information Center should direct requests for copies of this report to:

Defense Technical Information Center
Cameron Station
Alexandria VA 22314

TECHNICAL REVIEW AND APPROVAL

AL/CF-TR-1994-0139

The voluntary informed consent of the subjects used in this research was obtained as required by Air Force Regulation 169-3.

This report has been reviewed by the Office of Public Affairs (PA) and is releasable to the National Technical Information Service (NTIS). At NTIS, it will be available to the general public, including foreign nations.

This technical report has been reviewed and is approved for publication.

FOR THE DIRECTOR

Thomas J. Moore

THOMAS J. MOORE, Chief
Biodynamics and Biocommunications Division
Crew Systems Directorate
Armstrong Laboratory

REPORT DOCUMENTATION PAGE

Form Approved
OMB No. 0704-0188

Public reporting burden for this collection of information is estimated to average 1 hour per response, including the time for reviewing instructions, searching existing data sources, gathering and maintaining the data needed, and completing and reviewing the collection of information. Send comments regarding this burden estimate or any other aspect of this collection of information, including suggestions for reducing this burden, to Washington Headquarters Services, Directorate for Information Operations and Reports, 1215 Jefferson Davis Highway, Suite 1204, Arlington, VA 22202-4302, and to the Office of Management and Budget, Paperwork Reduction Project (0704-0188), Washington, DC 20503.

1. AGENCY USE ONLY *(Leave blank)*

2. REPORT DATE
March 1993

3. REPORT TYPE AND DATES COVERED
FINAL - JULY 1992 - SEPTEMBER 1992

4. TITLE AND SUBTITLE
The Use of Virtual Fixtures to Enhance Operator Performance in Time Delayed Teleoperation

5. FUNDING NUMBERS
PE - 62202F
PR - ILIR
TA - CB
WU - 31

6. AUTHOR(S)
Louis B. Rosenberg

7. PERFORMING ORGANIZATION NAME(S) AND ADDRESS(ES)
Armstrong Laboratory, Crew Systems Directorate
Biodynamics and Biocommunications Division
Human Systems Center
Air Force Materiel Command
Wright-Patterson AFB OH 45433-7901

8. PERFORMING ORGANIZATION REPORT NUMBER
AL/CF-TR-1994-0139

9. SPONSORING/MONITORING AGENCY NAME(S) AND ADDRESS(ES)

10. SPONSORING/MONITORING AGENCY REPORT NUMBER

11. SUPPLEMENTARY NOTES

12a. DISTRIBUTION/AVAILABILITY STATEMENT
Approved for public release; distribution is unlimited.

12b. DISTRIBUTION CODE

13. ABSTRACT *(Maximum 200 words)*

This report reviews the notion of *virtual fixtures* for force-reflecting telepresence systems that has been introduced in a previous report and describes an additional study which demonstrates that such fixtures can reduce performance degradation due to transmission time delay. Real world tools and fixtures can enhance performance by guiding manual operations, providing localizing references, and reducing the mental processing required to perform a task. *Virtual fixtures* are computer-generated percepts overlaid onto the force-reflecting master workspace that have been shown to provide similar benefits in teleoperation tasks without time delay. Virtual fixtures are superimposed on top of the presentation of the remote site, completely independent of all sensory feedback from the remote worksite (and therefore unaffected by transmission delays). As a result, virtual fixtures act as high fidelity reference points overlaid on top of an otherwise time-distorted perceptual environment. This study expands the testing of the virtual fixture concept by using simple combinations of haptic surfaces as perceptual overlays in a standardized peg-insertion task, with the goal of minimizing performance degradation due to time delay. Six subjects were tested using a force-reflecting exoskeleton master device to control a slave robot arm with no time delay, 250 ms delay, and 450 ms delay. A Fitts' law paradigm quantified operator performance for each of four fixture configurations. Without the use of virtual fixtures, operator performance was reduced by 36% for the 250 ms delay and 44% for the 450 ms delay. With the use of the most effective virtual fixtures tested, there was no measured performance degradation in the time-delayed teleoperation. Results suggest that virtual fixturing can reduce telemanipulation performance degradations caused by time delay.

14. SUBJECT TERMS
teleoperation, force reflection, telerobotics, time delay, force feedback, space

15. NUMBER OF PAGES
53

16. PRICE CODE

17. SECURITY CLASSIFICATION OF REPORT	18. SECURITY CLASSIFICATION OF THIS PAGE	19. SECURITY CLASSIFICATION OF ABSTRACT	20. LIMITATION OF ABSTRACT
UNCLASSIFIED	UNCLASSIFIED	UNCLASSIFIED	UL

THIS PAGE INTENTIONALLY LEFT BLANK

PREFACE

This work was performed with facilities and support from Armstrong Laboratory with headquarters at Brooks AFB, and its Crew Systems Directorate, Human Sensory Feedback Group at Wright-Patterson AFB, Ohio. The work is part of a graduate thesis done in conjunction with the Center for Design Research, Stanford University, Stanford, California. Special thanks to Professor Larry Leifer.

Accesion For
NTIS CRA&I ☑
DTIC TAB ☐
Unannounced ☐
Justification
By
Distribution /
Availability Codes
Dist | Avail and / or Special
A-1

Footnote: the Virtual Fixtures project was funded by the Air Force Office of Scientific Research (AFOSR) and is therefore entered into the public domain. The research was conducted at Stanford, Air Force Research Laboratory (Armstrong Lab), and NASA Ames Research Center. The objective of the Virtual Fixtures platform was to research whether it was possible to incorporate interactive virtual objects (called "virtual fixtures") into a user's perception of real workspaces. This concept later became commonly referred to as augmented reality (AR) or mixed reality (MR).

THIS PAGE INTENTIONALLY LEFT BLANK

TABLE OF CONTENTS

	Page
INTRODUCTION	1
Telepresence and the Effect of Time Delay	1
The Concept of Perceptual Overlays	3
The Virtual Fixture Metaphor	4
Virtual Fixtures and Time Delay	6
Perceptual Workstation Environment	9
TELEOPERATOR PERFORMANCE ASSESSMENT	10
Fitts' Law Performance Test	10
EXPERIMENTAL HARDWARE	13
Virtual Fixture Performance Testbed	13
Task Board: AF/Navy Teleoperator Performance Evaluation Battery	13
MBA Exoskeletal Master/Merlin Robot Arm Slave	14
Monocular Vision System	16
Virtual Fixture Board	16
Overall Test Setup	18
EXPERIMENTAL DESIGN AND PROCEDURE	20
Experimental Design	20
Experimental Protocol	23
RESULTS	27
DISCUSSION	32
Overview of Results	32
Peg Insertion Trials Without Virtual Fixture	32
Peg Insertion Trials With Virtual Fixtures	33
Characteristic Trajectory Paths for Peg Insertion Trials	36
CONCLUSIONS	42
REFERENCES	43

LIST OF FIGURES

Figure		Page
1	Measurements Used to Define Task Difficulty.	11
2	Photograph of the AF/Navy Teleoperator Performance Evaluation Battery Task Board Used for Implementing Peg Insertion Fitts' Law Task.	13
3	Photograph of Subject Wearing MBA Kinesthetic Exoskeleton Used as the Master in the Teleoperator System	14
4	Schematic of Task Board with xy Plane of Allowable Peg Motion	15
5	Complete Telepresence System Developed to Implement the Testing of Teleoperator Performance in a Standardized Peg Insertion Task with and without the Aid of Virtual Fixtures.	17
6	Virtual Fixtures Shown Overlaid onto Workspace as They are Perceived by Subjects	21
7	Sample Trajectory of Peg from Start Hole to Target Hole as Guided by a Virtual Fixture.	22
8	Performance Degradation Due to Time Delay for Each of the Four Virtual Fixture Configurations Tested	31
9	Sample Trajectory Plots for NO FIXTURE Trials Shown for Each Time Delay Period	37
10	Sample Trajectory Plots for FIXTURE 4 Trials Shown for Each Time Delay Period	38
11	Sample Trajectory Plots for FIXTURE 6 Trials Shown for Each Time Delay Period	39

LIST OF TABLES

Table		Page
1	Index of Difficulty (ID) Shown for All Combinations of Peg Size and Peg Motion Amplitudes as Predicted by Fitts' Law.	24
2	Testing Schedule: All Four Tests Shown along with Corresponding Daily Sessions and Fixtures Tested on that Day.	26
3	Mean Movement Times for Each Index of Difficulty are Shown for Six Subjects using NO FIXTURE to Perform Peg Insertion Tasks with No Delay, 250 ms Delay, and 450 ms Delay	27
4	Mean Movement Times for Each Index of Difficulty are Shown for Six Subjects using FIXTURE 5 to Perform Peg Insertion Tasks with No Delay, 250 ms Delay, and 450 ms Delay	28
5	Mean Movement Times for Each Index of Difficulty are Shown for Six Subjects using FIXTURE 4 to Perform Peg Insertion Tasks with No Delay, 250 ms Delay, and 450 ms Delay	28
6	Mean Movement Times for Each Index of Difficulty are Shown for Six Subjects using FIXTURE 6 to Perform Peg Insertion Tasks with No Delay, 250 ms Delay, and 450 ms Delay	28
7	Mean Coefficient of Variance for All Subjects Performing Tasks of the Same Difficulty with Each Fixture as Shown	29
8	Performance Degradation Due to Time Delays for All Six Subjects Performing Task using NO FIXTURE.	30
9	Performance Degradation Due to Time Delays for All Six Subjects Performing Task using FIXTURE 5	30
10	Performance Degradation Due to Time Delays for All Six Subjects Performing Task using FIXTURE 4	30
11	Performance Degradation Due to Time Delays for All Six Subjects Performing Task using FIXTURE 6	31

This page intentionally left blank.

INTRODUCTION

Telepresence and the Effect of Time Delay

The fundamental purpose of a telepresence system is to extend an operator's sensory-motor facilities and problem solving abilities to a remote environment [21]. Telepresence is achieved by projecting an operator's manipulatory dexterity to a remote environment while reflecting sensory information from that environment so realistically that the operator feels present at the remote site [1]. The illusion of *presence* is dependent upon the fidelity and scope of the interface. A fundamental requirement of presence is a strong correlation between the operator's movements, as perceived proprioceptively and kinesthetically by the operator, and the corresponding manipulations in the remote site, as perceived visually and haptically by the operator [11]. Time delay between master and slave distorts the correlation between kinesthetic sense and feedback from the remote environment, destroys the illusion of presence, and ultimately degrades performance within the remote environment [5]. Time delays as short as 100 ms have been found to degrade performance in telemanipulation tasks. Because destructive time delays are inherent to all telepresence systems in which the remote sites require round trip communication transmission time of more than 100 ms, much effort has gone into studying and eliminating the performance degradation resulting from such delays.

Ferrel (1965) was the first to demonstrate experimentally the performance degradation resulting from time delays in teleoperation [6, 7]. He found that operators confronted with time delay had a tendency to adopt a *move-and-wait* strategy. Thompson (1977) showed how task completion times were slowed by both time delay and reduction in degrees of constraint in part mating tasks [33]. Since that time, much research has been devoted toward combating the effect of temporal delays through supervisory control and predictive displays. *Supervisory control* solves the time delay problem by simply removing the human from the control loop. Supervisory systems allow an operator to specify high-level commands to an autonomous manipulator in a remote environment [4]. Although this technique is valuable for tasks that can be performed by an autonomous manipulator, it does not solve the time

delay problem for those cases when human presence is required. Predictive displays, on the other hand, combat the time delay problem while still maintaining some degree of operator presence in the remote environment. Rather than providing the operator with time delayed feedback from a remote worksite, a predictive display provides the operator with simulated sensory feedback generated through simulated interaction with a computer model of the remote environment. The interaction with the computer model can occur in real time, while the real telemanipulation task actually occurs some time delay later. In theory, interaction with a highly accurate and perceptually rich *model* of a remote environment would provide an operator with equivalent sensory feedback to actual telepresence in the *real* remote environment. In practice, computational requirements limit most predictive displays to highly simplified and abstracted visual feedback from the simulated remote site [2, 10, 18]. In a few cases, limited use of other sensory modalities such as basic haptic information have been incorporated into predictive displays as well [9, 15, 20].

Although predictive displays have proven effective in combating performance degradation due to time delay, the use of such systems is greatly limited by the requirement for accurate modeling. For a predictive display to be effective, the remote manipulator and remote workspace must be modeled accurately enough that predictive interactions between the simulated slave manipulator and the simulated remote environment allow an operator to effectively perform a task in the *real* worksite. As a result, the use of predictive displays is limited to simple tasks that are performed in well structured environments whose layouts are well known in advance.

An alternative or supplement to the implementation of either supervisory control or predictive display methods is the use of *virtual fixtures* to reduce performance degradation due to time delay in remote manipulation tasks. Because the use of virtual fixtures does not involve modeling of the workspace, detailed previous knowledge of the remote site is not required. Thus, virtual fixturing is particularly useful for enhancing time delayed teleoperation tasks in unstructured, changing environments where other methods fail. Before describing an empirical study which demonstrates the

effectiveness of virtual fixtures to reduce the performance degradation due to time delays, a brief review of the virtual fixture concept is given.

The Concept of Perceptual Overlays

When asked to draw a straight line in the real world, human performance can be greatly enhanced by using a simple tool such as a ruler. The use of a ruler reduces the amount of mental processing required to perform the task, speeds an operator's line drawing ability, and most of all allows an operator to draw a significantly better line than if no ruler had been used at all. Without a ruler, line drawing is a manual task that requires constant visual supervision and hand/eye coordination. With a ruler, line drawing is not only faster and straighter, but the dependence on visual feedback is reduced, freeing up that modality for other uses. What is more, a ruler is often used as a barrier to protect against dangerous or destructive failures, protecting the work-piece from the slip of a pencil or knife. Such guidance and protection allows the operator to ease mental criteria for task success and failure, reducing the level of concentration devoted to the task. Although a simple tool by any standard, a common ruler is clearly a powerful performance aid in manual line drawing tasks.

Although the use of a ruler, or any straight-edge, to assist in straight-line drawing is an effective means of enhancing human performance in a manual task, can such a process be generalized beyond line drawing? Ruler use can be thought of as nothing more than a process of *overlaying* abstract sensory information on top of a workspace. Thus, a ruler can be generalized as a particular "perceptual overlay" designed to enhance operator performance in line drawing tasks [26]. In the particular case of a ruler, the overlaid sensory information represents a single rigid surface to be perceived haptically and visually by the user. By overlaying this additional sensory information on top of the workspace, the mental and physical demands of the straight-line drawing task are reduced and operator performance is enhanced.

If a simple ruler-like perceptual overlay can so greatly enhance the performance of a real world manipulatory task such as straight-line drawing, it seems that computer generated perceptual overlays could be developed

within virtual environments to enhance the performance of telemanipulation tasks within remote worksites. Just as a ruler can be overlaid on top of a real workspace, such virtual perceptual overlays could be overlaid on top of the sensory feedback from a remote workspace.

The Virtual Fixture Metaphor

Because the abstract notion of overlaid sensory information is as difficult to conceptualize as it is to talk about, the *virtual fixture metaphor* was introduced as a means of describing such computer generated sensations as concrete physical structures [Rosenberg 1992]. It must be stressed that the point of this metaphor is intended to facilitate the understanding of, and interaction with, perceptual overlays and should not be taken so literally as to limit the scope of the perceptual overlay concept. *Virtual fixtures* are thus defined as abstract sensory information overlaid on top of reflected sensory feedback from a remote environment. Although overlaid on top of the user's perception of the remote environment, virtual fixtures are completely independent of all information from the remote site and are thus immune from communication delays and bandwidth limitations.

Like the ruler guiding the pencil, virtual fixtures overlaid on top of a remote workspace could act to reduce mental processing required to perform the task, reduce the work load of certain sensory modalities, and most of all allow precision and performance to exceed natural human abilities. Although virtual fixtures could be functionally equivalent to fixtures in the real world, there are many advantages inherent to virtual fixtures because they are computer simulations rather than real physical hardware. When overlaid on top of a remote workspace, the fixtures only interact with the user and not with the workspace itself. Thus, virtual fixtures can occupy the same physical space as real objects in the remote workspace. This means that the workspace geometry imposes no constraints upon the placement or configuration of virtual fixtures. What is more, such fixturing has no mass, no physical or mechanical constraints, requires no machining time or maintenance, can be easily prototyped and modified, and can essentially be transported to remote locations using nothing more than standard communication links.

If we explore the concept of virtual fixtures using the simple ruler example as the starting point, the first elements to consider might be rigid planar surfaces. Such fixtures would be composed of haptic sensations generated by reflecting simulated forces to the operator through a force-reflecting master. As the operator interacts with the modeled surfaces, the reaction forces would be computed and reflected appropriately. Of course, such fixtures are by no means limited to rigid surfaces. Abstracting the fixturing concept, we might consider modeling compliant surfaces, damped surfaces, even viscous or coulomb frictional contacts. In fact, the simulation environment offers such freedom that virtual fixtures could even be developed as attractive or repulsive fields. Although fixtures composed of haptic sensations offer endless possibilities, the fixturing concept is not limited to that modality. Abstract fixtures could be composed of visual, auditory, even tactile sensations used alone or in cross-modal combinations. For example, if a haptic fixture composed of rigid planar surfaces or attractive force fields was developed to aid a particular task, an audio, video, or vibratory signal could be mapped to various locations along the fixture to enhance interaction. Such additional modalities could be used to indicate deviations from a trajectory, proximity to a danger zone, even provide feedback of velocities or accelerations.

Abstracting the fixturing concept further, we could imagine virtual fixtures imbued with particular visual qualities to enhance interaction with environments. For example, virtual fixtures composed of haptic surfaces could be modeled with optical properties to suit the task at hand. The fixture might be invisible to the user if the operator gains no benefit from visual cues, it could be made to look like a solid object if rich visual cues are useful for the task, it could even be made to look like a transparent glassy solid if visual cues are important but the user wants to avoid obscuring the workspace. Fixtures might even be designed as visual filters to block particular distractions, enhance contrast, provide depth cues, even magnify a part of the workspace. One can even imagine the benefit of a fixture composed of compliant surfaces which changes color or brightness with compression. Previous work with targeting cues [3], predictive displays [2, 19, 27, 28, 29], and perspective overlays [14, 32] has demonstrated that overlaid visual cues can enhance performance and understanding within a teleoperation environment.

If the description of virtual fixtures thus far seems too abstract, a simple example may drive the concept home. Imagine a situation where a teleoperating surgeon performs a delicate procedure on a patient. Although such uses of telerobotics are still in the research phase, it is an application that demands a high degree of human performance within a remote workspace. Now imagine that a virtual fixture is being used by the doctor to enhance his abilities in this procedure. The fixture might appear to the doctor like a flat plane of glass with a grooved guide for the scalpel. The glass-like virtual fixture might actually pass directly through a patient's body, preventing the scalpel from penetrating below a particular depth but not obscuring vision of the tissue below. By sliding the scalpel along the edge of a groove in the fixture, the surgeon could make a perfect incision. The slightest deviation from the target trajectory might be reported by an audio or tactile signal. The power and flexibility of such a system would be unmatched by actual physical tooling. Besides the fact that such a fixture in the real world could not pass directly through a patient's body, it could not be put in place at the touch of a button, removed at the touch of another button, or easily altered as conditions change. What is more, virtual fixturing does not have to be fabricated, sterilized, monitored, or maintained.

Virtual Fixtures and Time Delay

As demonstrated in a companion study, the use of simple virtual fixtures greatly enhances operator performance in a telemanipulation task without time delay [26]. The results showed that operator performance was increased up to 70% when simple virtual fixtures were used as compared to the no-fixture case. The results suggested that virtual fixtures enhance performance by simplifying the conceptualization of the task, providing localizing references to the remote worksite, and by reducing the demands on taxed sensory modalities by providing perceptual information to multiple sensory pathways. When time delays are introduced into teleoperation systems, information lag between the user space and the remote workspace degenerates performance by distorting the correlation between the user's proprioceptive-kinesthetic sense of self dynamics and the sensory feedback from the remote worksite. Such time distortions hinder user localization to the remote

workspace and reduce the sensation of remote presence [5]. Because of the perceptual problems that time delays introduce, it is believed that the beneficial effects previously shown to be provided by virtual fixtures in teleoperation without time delay will be even more pronounced when time delays are included. This study investigates the question of whether the application of simple virtual fixtures can be effective in reducing performance degradation due to the introduction of time delay into teleoperation.

It should be pointed out that although a virtual fixture is overlaid on top of the reflection of the remote environment, it is completely *independent* of all sensory feedback from that remote environment. Because the virtual fixture does not depend on information being fed back from the remote site, user interaction with the fixture is immune to the temporal distortions that result from communication delays. Virtual fixtures therefore provide the operator with real-time reference points that are overlaid on top of the time distorted reflection of the remote site. It is hypothesized that the introduction of such real-time sensory cues can counteract the effect that time delay has in weakening the correlation between the operator's kinesthetic sense of self dynamics and the sensory feedback of remote manipulator dynamics. By providing sensory information that can be interacted with in real time, virtual fixtures are expected to enhance user localization to the remote worksite and strengthen the overall illusion of remote presence. Because a weakened correlation between kinesthetic sense and sensory feedback is a primary source of performance degradation due to time delay, it is hypothesized that the use of virtual fixtures will greatly enhance operator performance in time delayed teleoperation tasks.

Consider a teleoperated line drawing task, as described in a previous example, but this time include time delay in the scenario. The teleoperator is controlling a dexterous remote manipulator that is holding a pencil in its gripper. The operator is given the simple task of drawing a straight line on a piece of paper in the remote environment. Because drawing a straight line requires constant visual supervision and hand/eye coordination, even a small delay between the operator's imparted hand motion and visual feedback from the remote site can greatly impair operator performance. Such tasks often

result in operator instability when the user tries to compensate for deviations from the desired trajectory with real-time manual adjustments even though the user is being provided with time delayed sensory feedback of the trajectory deviation errors. Lines drawn under such conditions often reveal a characteristic oscillation resulting from the operator trying to react to past events.

Predictive displays have been implemented to combat these sorts of time delay problems by providing the operator with sensory feedback from a computer simulation of the remote workspace that can be interacted with in real time. For the above line drawing telemanipulation task, the user of a predictive display would perform the task by interacting with a graphic computer model the remote pencil and paper workspace rather than with the actual time delayed feedback from the remote site. If the model of the remote manipulator holding the pencil is accurate, the user's interaction with the simulation will cause the real pencil to draw a straight line in the real remote environment at some time delay after the user finishes manipulating the predictive model. Although the use of a predictive display is a viable solution to time delay problems in many simple telemanipulation tasks, the requirement for accurate modeling of the remote manipulator and remote workspace restricts the use of predictive displays to structured environments where the workspace and task are well known in advance.

A proposed alternative or supplement to the use of predictive displays, which does not require a detailed modeling of the remote workspace, is the implementation of virtual fixturing. Rather than simulating a real-time model of the remote pencil and paper worksite, the virtual fixture approach would be to simply provide the user with a real-time model of a virtual *ruler* that can be overlaid on top of the reflection of the real remote environment. Such a ruler would be a generic virtual fixture, chosen from a toolbox of fixtures, that could be overlaid on top of an arbitrary remote environment. The use of a virtual ruler in such a line drawing task would likely shift the user's sensory dependency from the time delayed visual feedback reflected from the remote site to the real-time haptic feedback provided by the fixture. As a result, the performance degradation due to time delay would likely be reduced. What is more, the kinematic constraints and haptic cues provided by the ruler-like

virtual fixture would likely result in the user drawing a much straighter line than if no fixture had been used. Of course this simple example of virtual fixture implementation can be extended to much more complex multidimensional tasks as well as more abstract virtual fixturing. It is in these more complex situations where the application of virtual fixturing is most appropriate.

Perceptual Workstation Environment

Although the notion of virtual fixturing does seem promising, if the development of fixtures requires complex computation or intimate knowledge of the workspace to be effective, robot autonomy or predictive displays might be a preferred solution to the task at hand. If, on the other hand, effective fixtures could be developed out of basic building blocks and quickly implemented by a teleoperator in an interactive environment, fixtures could be used in unstructured or changing environments unsuitable for autonomous systems. Thus it is proposed that a workstation type environment be developed to allow teleoperators to design and implement assistive fixtures when confronted with an unknown task in an unstructured environment upon first encounter. With such a workstation in mind, the study described in this paper investigates the use of simple haptic surfaces as perceptual aids in a basic peg insertion task. Although a workstation environment could implement more sophisticated surfaces or fields including a more diverse array of sensory modalities, it was thought that if simple combinations of haptic surfaces could be made into effective fixtures for time delayed telemanipulation, the potential of virtual fixtures would be adequately displayed.

TELEOPERATOR PERFORMANCE ASSESSMENT

Fitts' Law Performance Test

To quantify teleoperator performance in a remote manual task, a Fitts' Law paradigm was chosen because of its general acceptance as a robust measure of human performance. Although extensive use of Fitts' Law is documented in human performance literature, little work has been done to extend the paradigm to a telepresence environment. McGovern (1975) used a Fitts' Law task to demonstrate the merit of a closed loop master-slave system as compared to an open loop exoskeletal system. Hill (1979) used a Fitts' task to demonstrate performance differences as a function of force feedback from the manipulative system. Pepper (1988) was the first to use the Fitts' task in a true telepresence scenario. While previous work had employed Fitts' Law with the teleoperator in direct view of the workspace, this work used Fitts' Law to compare a variety of viewing conditions which included remote visual links between operator and workspace. These studies have shown that a Fitts' Law paradigm is appropriate for analysis of perceptual-motor performance within teleoperated or telepresence systems.

Fitts (1954) established a means of quantifying human performance in terms of information processing capability of the neuromotor system. He developed a relationship between the speed and accuracy of human motor performance which demonstrates that the speed of a task requiring a particular accuracy is bounded by the capacity of the neuromuscular system control movements. Fitts argued that if manual control was limited by the information processing rate of the peripheral and central nervous system, movement times would be limited by the information processing demands of the task. This concept is apparent if we think of a task requiring great accuracy such as threading a needle. Why do we perform a threading task with infuriating sluggishness? Such a task is limited by human information processing capacity (i.e., how fast a human can perceive the environment, actuate limbs, and adjust for error). A task such as threading a needle requires many fine adjustments and is thus limited by how many cycles of perception and adjustment can be performed per unit time (i.e., limited by human bandwidth).

To measure human information processing capacity as an indication of performance within the telepresence environment, a peg-in-hole task was used. Like threading a needle, the difficulty of peg insertion is a function of the difference between the peg diameter and the hole diameter. The tighter the fit, the more accuracy required, and thus the slower the maximum performance speed. By requiring subjects to perform a standardized peg insertion task as fast as they can, completion times can be measured and compared to task difficulty to yield information processing capacity for that task. By doing such an analysis upon subjects with and without the aid of various virtual fixtures, changes in task completion time will indicate performance changes resulting from fixture use. Thus, by using a peg-in-hole Fitts' Law analysis, the effectiveness of various virtual fixtures as perceptual aids can be quantified.

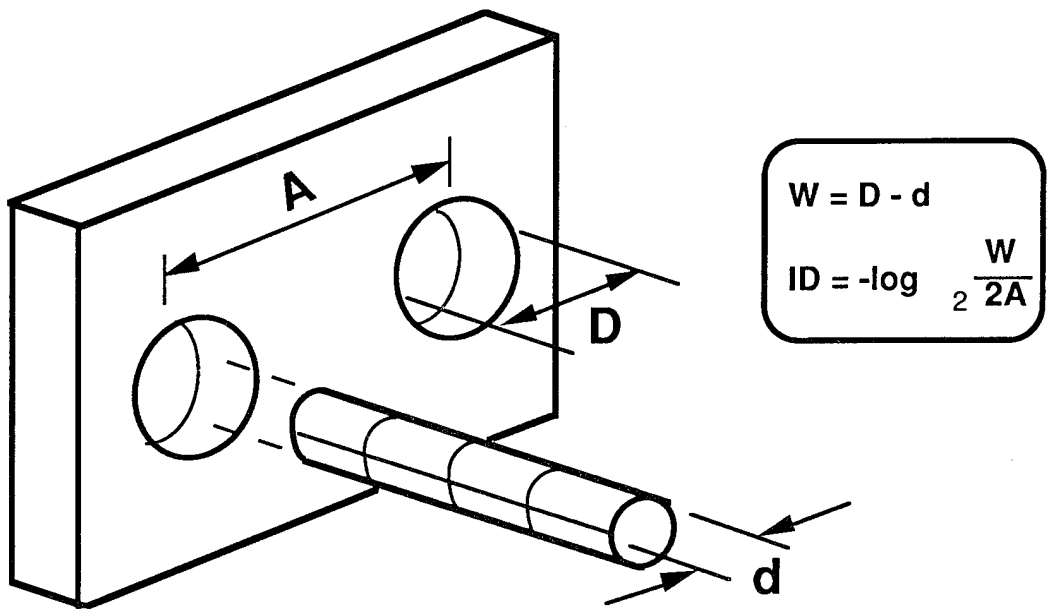

Figure 1. Measurements Used to Define Task Difficulty

Through an extensive review of human psychomotor, perceptual, and cognitive test batteries, the Naval Oceans Systems Center developed a peg-in-hole performance task specifically representative of teleoperator manipulative activities [22]. The test battery requires subjects to move pegs

of various diameter between holes of varied spacing. Movement times for peg motions are recorded and correlated with task difficulty. As defined by Fitts [8], the binary Index of Difficulty, ID, for the one dimensional peg transfer task can be computed as:

$$ID = -\log_2 \frac{W}{2A} \qquad \text{(bits/response)}$$

where A is the amplitude of the motion and W is the peg tolerance defined as the difference between the hole diameter and the peg diameter. These quantities are shown in Figure 1.

Fitts' Law [8] relates task completion time to task ID by defining the movement time, mt, as follows:

$$mt = k_1\ ID + k_2 \qquad \text{(sec)}$$

with k_1 and k_2 being characteristic constants of the individual which represent the slope and intercept of the Fitts' Law curve. The reciprocal of the slope of the Fitts' Law curve ($1/k_1$) has units (bits/sec) which are identical to units of capacity for an information channel and are thus an accepted measure of human information processing capacity [25]. Because the slope is susceptible to distortions resulting from changes in strategy between tasks of different difficulty, a more robust measure of processing capacity was also computed called the *binary Index of Performance*. This value, abbreviated as Ip, describes the information processing capacity required of the operator to perform a task of a particular difficulty [Fitts]. Ip has units (bits/sec) and is defined as follows:

$$Ip = -\frac{1}{mt} \log_2 \frac{W}{2A} \qquad \text{(bits/sec)}$$

$$Ip = \frac{ID}{mt} \qquad \text{(bits/sec)}$$

where mt is the movement time required to complete the task. Index of performance Ip is an accepted measure of the information processing capacity of a teleoperator [25].

EXPERIMENTAL HARDWARE

Virtual Fixture Performance Testbed

To implement a standardized Fitts' Law performance test in a telepresence environment, the following hardware subsystems were used: Peg Insertion Task Board, MBA Exoskeletal Master / Merlin Robot Arm Slave, Monocular Vision System, and Virtual Fixture Board.

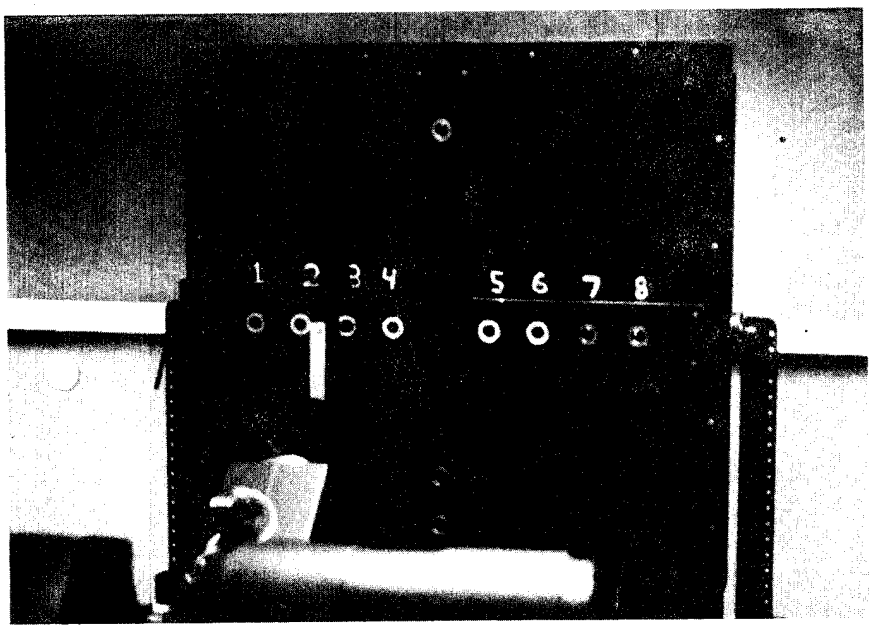

Figure 2. Photograph of the AF/Navy Teleoperator Performance Evaluation Battery Task Board Used for Implementing Peg Insertion Fitts' Law Task. Also shown is the Merlin Robot Arm used as the slave in the teleoperated system.

Task Board: AF/Navy Teleoperator Performance Evaluation Battery

As shown in Figure 2, a specialized task board was used to implement the performance task. This task board was originally developed by the Naval Oceans Systems Center to implement a controlled peg-in-hole test battery for telemanipulation systems [22, 31]. Holes on the board are arranged to accommodate a wide range of peg sizes and movement amplitudes. This study made use of four holes (diameter 2.00 cm) spaced to allow horizontal peg movements of 4.00 cm and 16.00 cm. Three pegs (diameters 0.75 cm, 0.98 cm, 1.50 cm) were used in the task to vary the peg insertion tolerance. The bottom

of each hole contains a microswitch connected to a PC via a Digital I/O controller card. The PC controls and monitors the peg insertion portion of the experiment. The computer is equipped with a real-time clock for measuring peg movement times to the nearest millisecond. The timer is started when the peg is extracted from the start hole and stopped when inserted into the target hole.

MBA Exoskeletal Master / Merlin Robot Arm Slave

As shown in Figure 3, the MBA exoskeleton master is a dual-arm, full upper body exoskeleton which can transduce motion in seven degrees of freedom for each arm [16]. In its current configuration, the device is used only as a sensor; no force information is reflected back to the user through the exoskeleton. Thus, peg insertions were performed based only on visual and auditory feedback from the workspace. This reduced sensory feedback environment offered a good testbed for the prowess of virtual fixtures.

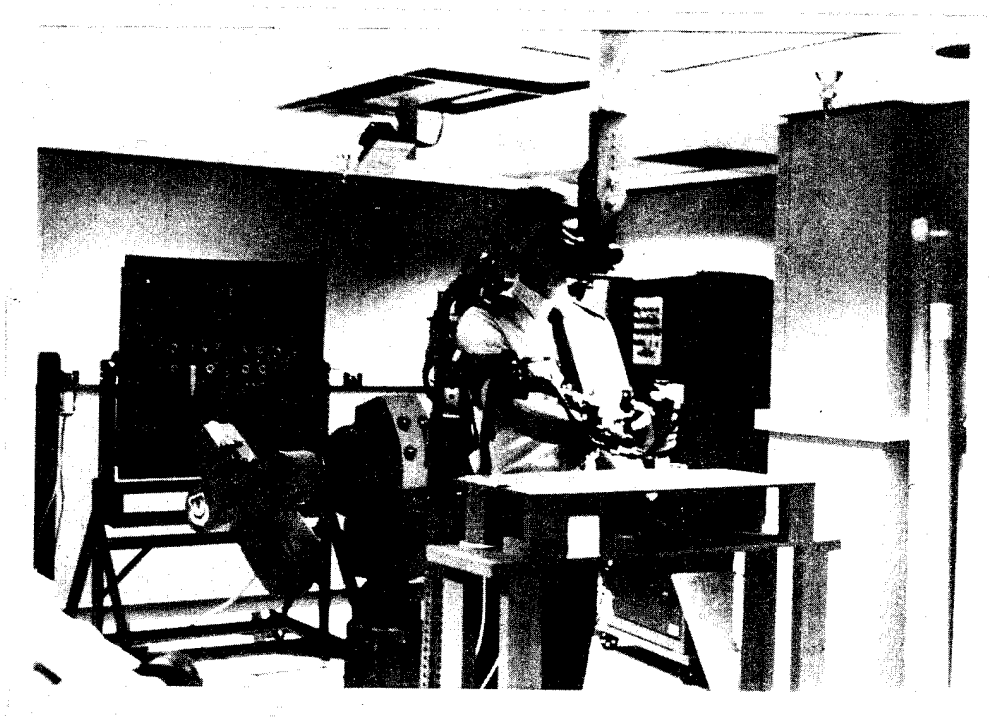

Figure 3. Photograph of Subject Wearing MBA Kinesthetic Exoskeleton Used as the Master in the Teleoperator System

In this experiment, the position of the subject's right hand was tracked and fed to the slave robot arm. An end-effector was constructed for the slave robot which housed the peg and allowed for easy interchange of the various diameter pegs. Because of the difficulty of the teleoperated peg insertion task without force feedback, the slave robot was programmed to maintain its end-effector orientation perpendicular to the board at all times. This arrangement simplified the task and eliminated the possibility of subjects torquing the peg in the hole. To further simplify the task, the robot was constrained to move only in a horizontal plane level with the target holes. Thus the task only required two-dimensional positioning of the peg in the xy plane with x defined into the board, and y defined along the horizontal row of target holes as shown in Figure 4. It should be noted that although the task was constrained to planar positioning, it was sufficiently difficult to require subjects to practice for two 45-minute sessions before training was complete. The task was designed to be simple in concept but difficult enough that the subjects would not approach the upper bound of the slave robot's ability to perform the task.

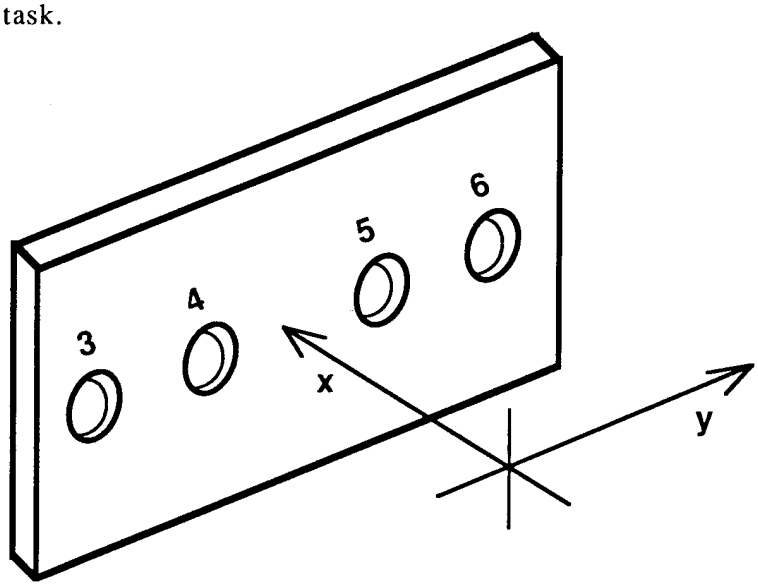

Figure 4. Schematic of Task Board with xy Plane of Allowable Peg Motion

To protect the task board and the robot, the peg was rigidly constrained in all degrees of freedom except along the x axis pointing into the task board. Along that axis, the peg floated on a stiff spring so that strong forward impacts of the peg with the board would not jar the board or damage the slave robot.

Monocular Vision System

A previous study using an identical task board performed by the Naval Oceans Systems Center has shown that stereo vision feedback offers no performance advantage over the monocular projections used in this peg insertion task [22, 31]. Thus, a simple monocular vision system was implemented to provide visual feedback for this experiment. The system was designed as an inexpensive means of creating the illusion of operator presence while providing visual feedback of the workspace. The system used 7X power binocular optics focused upon a distant color video monitor which displayed the output of a single camera in the workspace focused on the task board. The monitor was placed at a distance from the optics in such a way that the magnification of the video image created the illusion that the task board was within reach of the operator's hands. Robot end-effector motion was scaled to match operator hand motion so that the apparent end-effector position corresponded to the user's kinesthetic sense of arm position. Such a correlation between kinesthetic feedback and visual feedback of robot end-effector position greatly enhanced the user's sense of presence within the workspace. Testing of the system revealed best results when the angle of the camera incident on the workspace was closely matched by the angle that the magnifying optics were incident upon the distant video monitor. When these angles were not similar, conflicting perspective cues hindered the illusion of presence. Figure 5 includes a rough schematic of the vision system as part of the overall system hardware.

Virtual Fixture Board

Rather than using a force reflecting exoskeleton to model the rigid impedance surfaces which compose the virtual fixtures, it was thought that the preliminary tests of virtual fixtures should not be influenced by hardware limitations of force reflecting devices. Thus a Fixture Board was designed which allowed real rigid surfaces to be developed out of acrylic sheets. The MBA exoskeleton would interact with the real acrylic surfaces and reflect that information to the user. As far as the user was concerned, the haptic perceptions of these surfaces were coming from the exoskeleton and were just as much "virtual" information as if they were truly computer

generated. The benefit of this approach was that the reflected perceptions of these surfaces were perfectly modeled. The surfaces felt crisp and real, free from the bandwidth limitations of most force reflecting devices. The drawback of this approach was that more abstract fixtures were impossible to generate using this method.

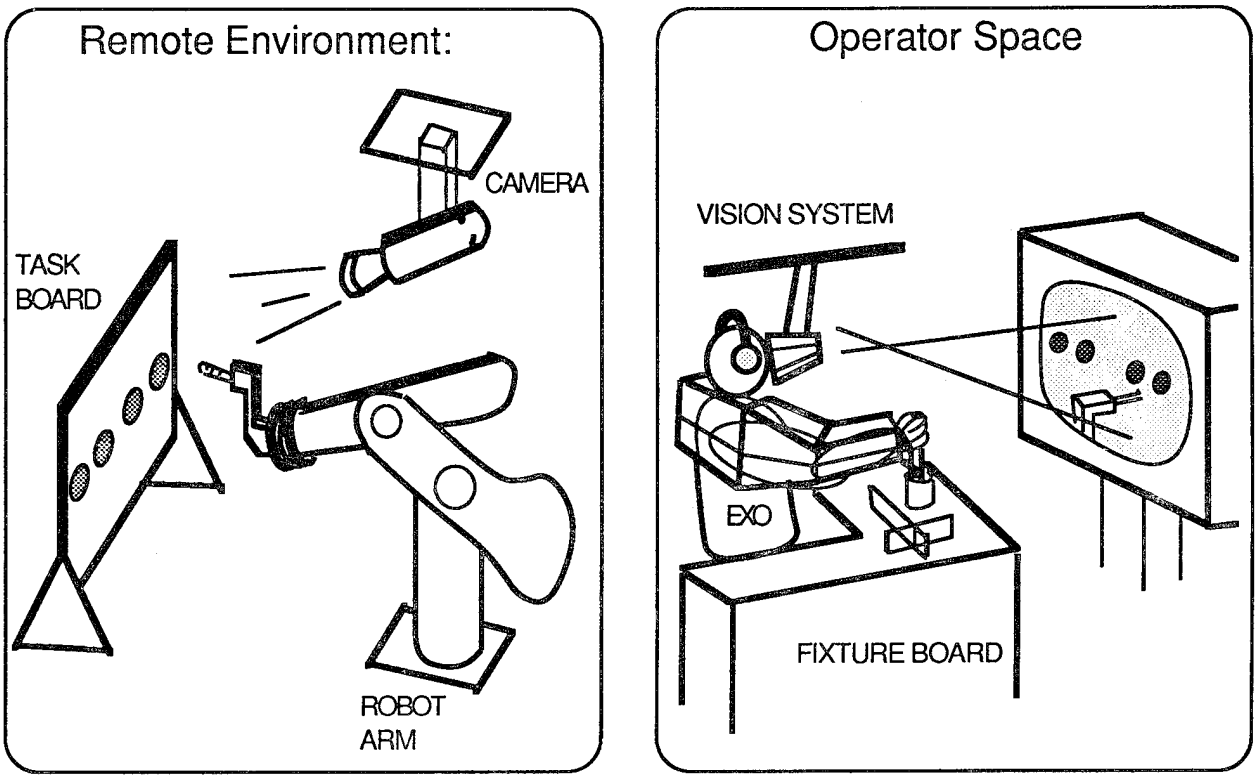

Figure 5. Complete Telepresence System Developed to Implement the Testing of Teleoperator Performance in a Standardized Peg Insertion Task with and without the Aid of Virtual Fixtures

The virtual fixtures were constructed out of acrylic sheets and positioned upon the *fixture board*, a wooden platform positioned in front of the user as shown in Figure 5. To make the fixtures quickly interchangeable, they were constrained and positioned on the wooden platform by locating pins. The exoskeleton was fitted with a Teflon cap at the end of the hand grip which was used as the contact surface between the exoskeleton and the fixture. The fixtures were treated regularly with an oil-based lubricant so that little friction was noticeable between the Teflon and the acrylic surfaces. Although frictional surfaces could make for effective virtual fixtures, the

intent of this study was to look at very simple surfaces modeled only as rigid impedances free from any viscous or coulombic damping.

Although the haptic fixtures were modeled physically rather than computationally, auditory fixtures were tested that were pure computer simulations. Simple compliant surfaces were modeled in which the compression of the surface was proportional to a linear change in pitch. Tones were generated on a PC and fed to the user via stereo headphones. These trials served as a testbed for alternate modality fixtures as well as a proof of concept of purely computer-generated fixtures.

Overall Test Setup

Having described each of the major components of this test setup, it is important to clearly describe the system as a whole before getting into the details of the subject testing. As shown in Figure 5, the system is divided into two physically separate parts: the *remote environment* and the *operator space*. The remote environment contains the task board, the Merlin robot arm, and a single video camera pointed at the task board. The camera is positioned so that the incident perspective is similar to what a human operator would see if standing directly in front of the board and performing the peg insertions in person. The operator space contains the exoskeleton, the vision system, and the virtual fixture board. Once inside the exoskeleton and vision system, the subject is presented with a projection of the image from the camera in the remote environment. The subject is given the illusion that the task board is situated directly before him, within reaching distance of the exoskeleton. In reality, the task board is on the opposite side of the laboratory, behind the subject and completely out of view. The fixture table is placed directly in front of the subject in such a way that it cannot be seen when looking through the vision system, but feels as though it occupies the same space as the apparent image of the task board. Thus, virtual fixtures implemented on the fixture board feel as though they are overlaid on top of their perception of the remote environment.

The remote robot arm is slaved to the right hand position of the exoskeleton. Thus, when the subject moves his right hand to interact with the image of the task board, the end-effector on the slave arm follows. Because the subject cannot see his own hand when looking into the vision system but does see the remote robot end-effector in the position where he feels his hand to be, a sense of presence within the remote environment is created. The subjects also wear a set of stereo headphones for use in implementing auditory perceptual overlays. Auditory surfaces and fields can be modeled on the control computer and interacted with by the user. The complete system provides a powerful testbed for projecting subjects into a remote environment and overlaying haptic and auditory information on top of the reflected percepts. The set of tests described in this paper implements only haptic sensory overlays, although a previous study implemented both haptic and auditory virtual fixtures [26].

EXPERIMENTAL DESIGN & PROCEDURE

Experimental Design

The goal of this study was to investigate the effect that the presentation of overlaid virtual fixtures has upon performance in a standard teleoperated task with time delay. A previous study compared eight virtual fixture designs in a telemanipulation task without time delay [Rosenberg]. For this experiment, three of the eight previously tested fixtures were used for comparison to a no-fixture control case. Each of the three fixture configurations was tested with no delay, 250 ms delay, and 450 ms latency between master and slave. Figure 6 shows a schematic representation of each of the fixtures tested. (NOTE: The fixtures are labeled with the same numbers given in the previous study for reference purposes.) These fixtures are shown overlaid on top of the fixture board as they are perceived by the subjects. Although these fixtures are represented graphically in this figure, they are perceived only as forces by the subjects. Although instilling visual qualities to fixtures is a viable application of perceptual overlays and an important topic for future investigation into virtual fixtures, this study was restricted only to haptic modalities.

The three virtual fixtures tested are composed of simple combinations of planar surfaces which are perceived haptically as rigid wall sensations by the users. As shown in Figure 6, virtual Fixture 4 is composed of three intersecting planar surfaces. One surface is simply a horizontal plane oriented like a table top in the workspace and aligned so that contact with the rigid surface will result in vertical alignment of the operator's hand with the holes in the peg board. The second plane runs diagonally across the first plane in such a way that interaction with this rigid surface will guide the subject's hand motion across the face of the board and inward towards the target hole. The third plane runs parallel with the target hole such that contact with the plane will halt hand motion when the peg passes in front of the target hole.

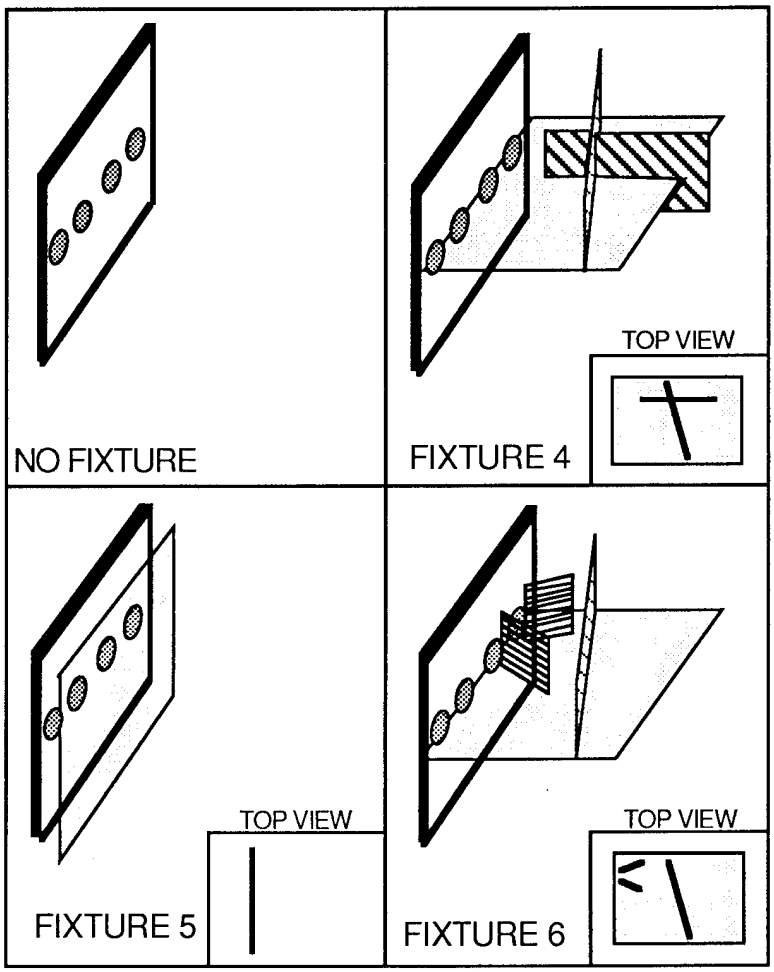

Figure 6. Virtual Fixtures Shown Overlaid onto Workspace as They are Perceived by Subjects. Also shown are top views, looking down from above the task board. These fixtures are shown graphically here, but they are perceived haptically by subjects.

To clarify the implementation of Fixture 4, Figure 7 shows a sample trajectory superimposed upon the schematic diagram of the fixture. This drawing demonstrates how the use of a fixture might influence the trajectory of the operator's hand. As shown in the figure, the rigid surfaces do not define the exact motion of the peg, but rather influence the trajectory by imposing rough kinematic boundaries on operator hand motion.

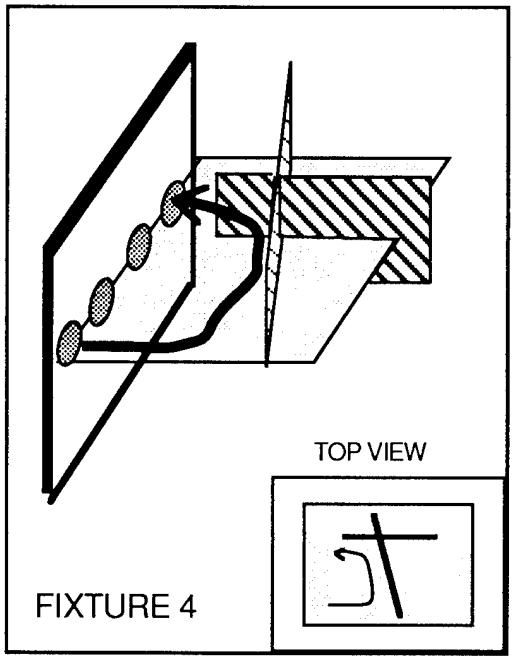

Figure 7. Sample Trajectory of Peg from Start Hole to Target Hole as Guided by a Virtual Fixture. As shown, the fixture does not define the motion of the operator's hand, but rather defines the boundaries of the motion.

Virtual Fixture 6 is similar to virtual Fixture 4 except that the surface which stops hand motion in front of the target hole is removed and two diagonal surfaces are added in its place. These two diagonal surfaces are positioned and oriented to assist in the fine positioning of the peg into the target hole.

Virtual Fixture 5 is very different from the two fixtures presented thus far in both its geometry and implementation. Fixture 5 is a rigid surface oriented parallel to the task board and located approximately 0.5" in front of the board. This fixture was *not* designed for interaction with the subject's right hand (the hand that performed the peg insertion task), but rather was

designed for interaction with the subject's *unused* left hand. Subjects were told to place their left hand upon the surface while performing the task with the right hand. The intent of this fixture is to isolate the effect of localization on performance in time delayed teleoperation tasks. A previous study of virtual fixtures in teleoperation without time delay suggested that interaction with virtual fixtures provides localizing information to the user which can enhance understanding of the remote workspace. It was hypothesized that the localization provided by virtual fixtures allows for better correlation of the operator's kinesthetic sense of hand position to the geometry of the remote site [26]. It is desired now to investigate if enhanced localization alone can reduce the detrimental effects that time delay has upon telemanipulation. Because the other fixtures to be tested in this study act to guide the operator's hand motion as well as to provide localizing references to the remote workspace, it would be impossible to isolate the effects of the localizing information alone. Fixture 5 was therefore designed; it only interacts with the unused hand and thus can only have a localizing effect upon operator performance.

Experimental Protocol

A series of tests was run to evaluate subject performance using each fixture configuration for each of three time delay periods: no delay, 250 ms delay, and 450 ms delay. Operator performance was recorded during test periods which included 12 practice and 36 timed peg insertion trials. A single trial consisted of moving a peg from a designated start hole to a designated target hole. The holes were referenced by numerals (3, 4, 5 or 6) located above each hole, as shown in Figure 4. Two start hole/target hole pairs were studied in these tests: a 16 cm motion from hole 3 to hole 6 and a 4 cm motion from hole 5 to hole 6. The 36 trial period was divided into three groups of 12 trials. Each of these groups required the subject to perform the insertion task using a different peg size. After the completion of each group of 12 trials, subjects were instructed to rest for approximately two minutes while one of three possible peg sizes was installed in the robot end-effector.

The use of two motion amplitudes (4 cm and 16 cm) and three peg sizes (0.75 cm, 0.98 cm, 1.50 cm diameter pegs) allowed for the testing of insertion trials with six different task difficulties. Table 1 shows all combinations of

peg size and motion amplitude and lists the Index of Difficulty for each task as dictated by Fitts' Law [8]. The order in which the three peg sizes were presented to each subject was randomized to ensure that mental and physical fatigue had similar effects on all task difficulties.

Table 1. *Index of Difficulties (ID)* Shown for All Combinations of Peg Size and Peg Motion Amplitudes as Predicted by Fitts' Law

	Motion Amplitude	
Diameter	5 to 6 (4 cm)	3 to 6 (16cm)
0.75 cm	**2.68** bits/response	**4.68** bits/response
0.98 cm	**2.98** bits/response	**4.98** bits/response
1.50 cm	**4.00** bits/response	**6.00** bits/response

Subjects were instructed to begin each test period with a 3 to 6 peg insertion trial. Subjects would then perform a 5 to 6 peg insertion trial, then a 3 to 6 peg insertion trial, and cycle in that manner throughout the 36 trials. Subjects were allowed to proceed through the test period at their own pace. To automate the testing procedure and allow subjects to proceed through the test with little operator intervention, a number of simple beeps was used to guide subject activity. When a subject inserted a peg into the correct starting hole, the task board control computer would emit an audible tone to signal that the peg was properly positioned. The subject would then keep the peg in the start hole for two seconds until the control computer produced a second tone which signaled that the task could now be performed at will. The reason for this two second waiting period was to ensure that the subject maintained a steady contact with the microswitch at the base of the start hole. The subjects were *not* required to perform the insertion task as soon as the second tone was heard; this second tone simply meant "you are free to go whenever ready." Thus, the subjects could mentally prepare themselves for the particular insertion task and begin at will. When ready, the subject would remove the peg from the start hole and insert it into the target hole as fast as possible. Upon insertion into the target hole, the control computer would emit a tone to signal that the trial had been successfully completed. The subject was then free to

proceed to the next insertion trial at will. At the end of each trial the control computer recorded the movement time along with the peg size and motion amplitude. After the completion of each group of 12 trials, the control computer would emit a long duration tone which signaled the subject to rest for two minutes while the operator exchanged peg sizes. Post testing interviews revealed that all subjects were comfortable with the use of audible tones to automate the testing procedure.

Subjects were tested over 6 experimental sessions, each lasting 45 to 60 minutes. To minimize the effects of fatigue and boredom, no subject completed more than one experimental session during a single day of testing. The first two experimental sessions included three test periods of 36 trials. The first period of the session was performed with no fixture and no delay, the second was performed with no fixture and 250 ms delay, and the third was performed with no fixture and 450 ms delay. These initial 216 trials were treated only as practice during which the subjects familiarized themselves with the use of the exoskeleton, Merlin robot arm, vision system, and fixture table. It was also intended that subjects get experience with the effect that time delay has upon telemanipulation.

It was found that by the end of the second practice session, all subjects had sufficiently learned the task that variability in movement times for trials of the same difficulty had fallen below 20% for every subject, with a mean variability of 15% for all subjects. Once learning had stabilized, subjects were sequentially tested using each of the test fixtures for each of three time delay scenarios. A new fixture configuration was tested during each of the next four daily sessions. Table 2 lists all of the daily sessions along with the fixtures tested during that session. The order of the last four daily sessions was randomized for each subject to reduce the effect that learning might have upon performance results.

Table 2. *Testing Schedule:* All Four Tests Shown along with Corresponding Daily Sessions and Fixtures Tested on that Day

TEST	SESSION	FIXTURES STUDIED
Practice	day 1	No Fixture: no delay 250ms delay 450ms delay
Practice	day 2	No Fixture: no delay 250ms delay 450ms delay
Test I	day 3	No Fixture: no delay 250ms delay 450ms delay
Test II	day 4	Fixture 5: no delay 250ms delay 450ms delay
Test III	day 5	Fixture 4: no delay 250ms delay 450ms delay
Test IV	day 6	Fixture 6: no delay 250ms delay 450ms delay

RESULTS

The following section presents the results of peg insertion trials for each time delay period for comparison among each of the virtual fixture configurations tested. The basic quantities presented are the recorded movement times for peg insertion trials and the coefficient of variation (COV) across movement times. The COV has been computed across the trials of the same index of difficulty performed with the same time delay and same virtual fixture configuration. The COV is therefore a measure of subject consistency in performing a particular task with a particular latency and using a particular virtual fixture. Tables 3 through 6 list the mean movement time results across all six subjects for each Index of Difficulty and each time delay configuration. Table 7 lists the coefficients of variation in movement times for each time delay and fixture configuration tested.

Table 3. *Mean Movement Times* for Each Index of Difficulty are Shown for Six Subjects using NO FIXTURE to Perform Peg Insertion Tasks with No Delay, 250 ms Delay, and 450 ms Delay. Also computed is the mean movement time across all trials (across task difficulty).

TEST 1: no fixture trials

	INDEX OF DIFFICULTY						
DELAY	2.68	2.98	4.00	4.68	4.98	6.00	mean
no delay	833ms	927ms	991ms	1617ms	1600ms	1666ms	1272ms
250ms	1144ms	1246ms	1374ms	2123ms	2142ms	2362ms	1731ms
450ms	1165ms	1284ms	1500ms	2140ms	2329ms	2636ms	1842ms

Table 4. *Mean Movement Times* for Each Index of Difficulty are Shown for Six Subjects using FIXTURE 5 to Perform Peg Insertion Tasks with No Delay, 250 ms Delay, and 450 ms Delay. Also computed is the mean movement time across all trials (across task difficulty).

TEST II: fixture 5 trials

	INDEX OF DIFFICULTY						
DELAY	2.68	2.98	4.00	4.68	4.98	6.00	mean
no delay	656ms	662ms	807ms	1448ms	1396ms	1497ms	1077ms
250ms	819ms	882ms	975ms	1683ms	1814ms	1892ms	1344ms
450ms	846ms	1003ms	1181ms	1941ms	2015ms	2273ms	1543ms

Table 5. *Mean Movement Times* for Each Index of Difficulty are Shown for Six Subjects using FIXTURE 4 to Perform Peg Insertion Tasks with No Delay, 250 ms Delay, and 450 ms Delay. Also computed is the mean movement time across all trials (across task difficulty).

TEST III: fixture 4 trials

	INDEX OF DIFFICULTY						
DELAY	2.68	2.98	4.00	4.68	4.98	6.00	mean
no delay	679ms	682ms	791ms	1375ms	1467ms	1506ms	1083ms
250ms	762ms	757ms	956ms	1473ms	1547ms	1625ms	1187ms
450ms	696ms	596ms	741ms	1518ms	1513ms	1540ms	1100ms

Table 6. *Mean Movement Times* for Each Index of Difficulty are Shown for Six Subjects using FIXTURE 6 to Perform Peg Insertion Tasks with No Delay, 250 ms Delay, and 450 ms Delay. Also computed is the mean movement time across all trials (across task difficulty).

TEST IV: fixture 6 trials

	INDEX OF DIFFICULTY						
DELAY	2.68	2.98	4.00	4.68	4.98	6.00	mean
no delay	641ms	691ms	811ms	1266ms	1361ms	1461ms	1039ms
250ms	618ms	669ms	717ms	1489ms	1417ms	1579ms	1082ms
450ms	635ms	591ms	721ms	1365ms	1499ms	1539ms	1058ms

Table 7. *Mean Coefficient of Variation* for All Subjects Performing Tasks of the Same Difficulty with Each Fixture as Shown. Also shown is the overall COV which indicates the overall consistency of the results.

	DELAY	COV
NO FIXTURE	No delay	14% ±3.3
	250 ms	14% ±3.2
	450 ms	18% ±3.9
FIXTURE 5	No delay	13% ±1.3
	250 ms	13% ±1.7
	450 ms	17% ±2.7
FIXTURE 4	No delay	8% ±1.5
	250 ms	9% ±1.0
	450 ms	14% ±1.8
FIXTURE 6	No delay	10% ±2.8
	250 ms	14% ±2.0
	450 ms	12% ±3.0
All Trials	MEAN	13% ±2.4

In order to quantify the drop in operator performance resulting from the introduction of time delays into the telemanipulation task in a way that could be easily compared among the various virtual fixture configurations tested, percentage increase in movement time was computed as a unitless measure of the effect that time delay had upon operator performance. Performance degradation was thus quantified as the percentage increase in movement time for peg insertion trials with either 250 ms and 450 ms delays as compared to the trials with no time delay. Tables 8 through 11 list the percentage increase in movement times corresponding to the use of each virtual fixture tested. Figure 8 shows the mean percentage increase in movement time associated with each time delay configuration for all of the virtual fixtures tested as well as for the no-fixture case.

Table 8. *Performance Degradation Due to Time Delays* for All Six Subjects Performing Task using NO FIXTURE. Performance degradation computed as percentage increase in movement times for peg insertion trials with 250 ms and 450 ms delays as compared to the trials with no time delay.

TEST I: no fixture trials

	INDEX OF DIFFICULTY							
DELAY	2.68	2.98	4.00	4.68	4.98	6.00	mean	stdev
250ms	37.3 %	34.4 %	38.6 %	31.3 %	33.9 %	41.8 %	36 %	±10.8
450ms	39.9 %	38.5 %	51.4 %	32.3 %	45.6 %	58.2 %	44 %	±17.4

Table 9. *Performance Degradation Due to Time Delays* for All Six Subjects Performing Task using FIXTURE 5. Performance degradation computed as percentage increase in movement times for peg insertion trials with 250 ms and 450 ms delays as compared to the trials with no time delay.

TEST II: fixture 5 trials

	INDEX OF DIFFICULTY							
DELAY	2.68	2.98	4.00	4.68	4.98	6.00	mean	stdev
250ms	24.9 %	33.3 %	20.8 %	16.2 %	30.0 %	26.4 %	25 %	± 9.5
450ms	28.9 %	51.5 %	46.3 %	34.0 %	44.4 %	51.8 %	43 %	±17.8

Table 10. *Performance Degradation Due to Time Delays* for All Six Subjects Performing Task using FIXTURE 4. Performance degradation computed as percentage increase in movement times for peg insertion trials with 250 ms and 450 ms delays as compared to the trials with no time delay.

TEST III: fixture 4 trials

	INDEX OF DIFFICULTY							
DELAY	2.68	2.98	4.00	4.68	4.98	6.00	mean	stdev
250ms	12.2 %	11.1 %	20.8 %	7.1 %	5.5 %	7.9 %	10 %	± 2.9
450ms	2.5 %	-12.6 %	-6.3 %	10.4 %	3.2 %	2.3 %	2 %	± 6.8

Table 11. *Performance Degradation Due to Time Delays* for All Six Subjects Performing Task using FIXTURE 6. Performance degradation computed as percentage increase in movement times for peg insertion trials with 250 ms and 450 ms delays as compared to the trials with no time delay.

TEST IV: fixture 6 trials

	INDEX OF DIFFICULTY							
DELAY	2.68	2.98	4.00	4.68	4.98	6.00	mean	stdev
250 ms	-3.7 %	-3.3 %	-11.6 %	17.6 %	4.13 %	8.1 %	4 %	± 10.1
450 ms	-1.0 %	-14.6 %	-11.1 %	7.9 %	10.1 %	5.4 %	2 %	± 8.9

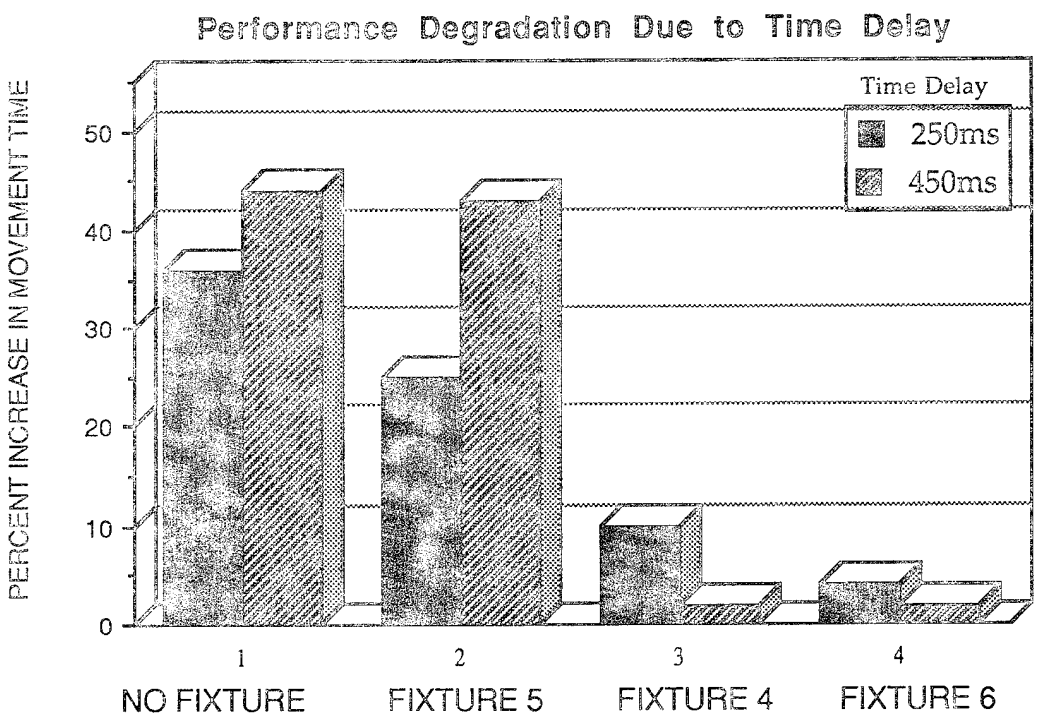

Figure 8. Performance Degradation Due to Time Delay for Each of the Four Virtual Fixture Configurations Tested. Performance degradation computed as mean percentage increase in movement time for peg insertion trials.

DISCUSSION

Overview of Results

The following section addresses the implications of performance degradation due to time delay and investigates the effect that virtual fixturing has upon operator performance in time delayed teleoperation. The objective of this analysis is, first, to quantify the effect that time delay has upon operator performance in a controlled telemanipulation task and, second, to determine if virtual fixtures can be used to effectively reduce the resulting drops in operator performance. Performance degradation has been computed as the percentage increase in movement time for a task of given difficulty when a particular time delay is introduced between the operator and the remote environment as compared to the no-delay case.

Before comparing the drops in operator performance associated with the introduction of time delay to the interface, the issue of repeatability and reliability of the results is addressed. As shown in Table 7, the coefficient of variation in movement times for trials with a given time delay and fixture configuration is under 18% for all combinations of test parameters. The mean coefficient of variation is 13% across all test parameters. This suggests that for a given task of a particular difficulty, performed by a given subject, with a particular time delay and fixture configuration, the variation in performance among all such trials was, on average, 13%. Such consistency in human performance testing is surprisingly good and suggests that the results of the experimental sessions are highly reliable and repeatable.

Peg Insertion Trials Without Virtual Fixture

As listed in Table 8 and shown in Figure 8, the time required to successfully complete a peg insertion trial was found to increase dramatically when time delays were introduced into the telemanipulation interface. For trials with small time delays of 250 ms and 450 ms, movement times increased, on average, by 36% and 44% respectively. This dramatic increase in movement times resulting from the introduction of small time delays suggests that operator performance in even the most simple telemanipulation tasks is

highly susceptible to degradation due to time delays. Assuming an ideal telemanipulation system with no time lag due to information processing and computation, time delays of 250 ms and 450 ms would correspond to communication transmission lags that would occur if the operator and the remote site were separated by distances as small as 37000 km and 67500 km respectively. Such distances would be typical when controlling a remote manipulator in geosynchronous earth orbit from a command station on the ground [13]. The results of this study suggest that to achieve efficient telemanipulation in earth orbit, some means of reducing performance degradation due to communication transmission lags is required. In a non-ideal telemanipulation system, latencies due to information processing and computation would compound the total time delay and reduce performance even more.

Peg Insertion Trials With Virtual Fixtures

As listed in Table 9 through Table 11 and shown in Figure 8, the increases in the movement time to successfully complete a peg insertion trial when virtual fixtures were used was significantly less than the increases in movement times for unaided trials. Turning first to peg insertion trials using virtual Fixture 5, Figure 6 shows that Fixture 5 is composed of a single rigid impedance plane which is parallel to the task board surface and located approximately 0.5" in front of the board. Whereas the other two fixtures tested were designed for interaction with the operator's right hand (the hand that manipulates the peg), Fixture 5 is designed for interaction only with the operator's unused left hand. Subjects place the palm of their left hand upon the surface while they perform the task with their right hand. This fixture was tested to isolate the effect of localization upon performance. As shown in Figure 8, the increases in movement times associated with time delays of 250 ms and 450 ms were 25% and 43% respectively. Comparing this to the 36% and 44% increases in unaided trials, we see that the use of Fixture 5 resulted in a small drop in performance degradation for the 250 ms delay trials but no drop in performance degradation for the 450 ms delay trials. This result suggests that a single localizing reference percept presented in isolation does play a

small part in reducing the performance degradation due to time delay, but that more elaborate fixtures are likely required to significantly combat the detrimental effects of time delay upon performance.

Turning next to peg insertion trials performed with the aid of virtual Fixture 4, we recall that Fixture 4 is composed of three intersecting rigid surfaces as shown in Figure 6. One is a horizontal surface oriented like a table top in the workspace and aligned so that contact with the surface will result in vertical alignment of the operator's hand with the holes in the peg board. The second plane runs diagonally across the first such that interaction with this surface will guide a subject's hand across the face of the board and inward towards the target hole. The third plane runs parallel with the target hole such that contact with the plane will halt hand motion when the peg is in front of the target hole. Remember that the fixture surfaces are perceived as overlaid haptic sensations only; subjects cannot see the fixtures when performing the task. It should also be noted that interaction with the overlaid haptic sensations provides real-time sensory feedback to the operator even though all interaction with the remote site is time distorted.

When provided with the real-time haptic information from virtual Fixture 4, performance degradation in the time delayed telemanipulation task was significantly less than in the no-fixture trials. As listed in Table 10 and shown in Figure 8, peg insertion trials using virtual Fixture 4 with time delays of 250 ms and 450 ms resulted in movement time increases of 10% and 2% respectively. Comparing this result to the 36% and 44% movement time increases for the no-fixture trials, it is clear that the use of virtual Fixture 4 has greatly reduced the drop in performance resulting from the introduction of time delays into the telemanipulation interface. In fact, for the longer delay of 450 ms, the use of virtual Fixture 4 results in movement times that reflect no statistically significant drop in operator performance as compared to the no-delay trials. The fact that less performance degradation was recorded for the 450 ms trials than was recorded for the 250 ms trials implies that subjects had an easier time taking advantage of the real-time sensory information provided by the virtual fixture in the trials with the longer delay. In post testing interviews, subjects reported finding it easier to focus their concentration on the real-time haptic sensations provided by the virtual

fixtures and focus less on the time delayed feedback from the remote site when the delay period was longer. In psychophysical terms, when the latency is short, the time delayed sensory information competes with real-time sensory information provided by the fixtures and masks their effects. The shorter the delay, the more the real-time and delayed sensations compete, and the greater the masking. This result is consistent with many psychophysical studies of perceptual masking where short delays between stimuli result in one stimuli overpowering or even inhibiting the perception of another.

Turning next to peg insertion trials performed with the aid of virtual Fixture 6, we recall that virtual Fixture 6 is similar to virtual Fixture 4 except in that the surface which stopped hand motion in front of the target hole is removed and two diagonal surfaces are added in its place. These two diagonal surfaces are positioned and oriented so as to assist in the fine positioning of the peg into the target hole. When provided with the real-time haptic information of virtual Fixture 6, we again find that the performance degradation in the time delayed telemanipulation task was significantly less than in the no-fixture trials. As listed in Table 11 and shown in Figure 8, peg insertion trials using virtual Fixture 6 with time delays of 250 ms and 450 ms resulted in movement time increases of 4% and 2% respectively. Since neither of these results reflects statistically significant increases in movement times, it is clear that when using virtual Fixture 6, subjects performed just as well with 250 ms and 450 ms time delays as they did in the no- time-delay trials. This result strongly confirms that virtual fixtures can be effective in reducing, and in this case actually eliminating, the performance degradation due to time delay.

In post testing interviews subjects were asked why they felt their performance was so much better with Fixtures 4 and 6 than with no fixture in time delay trials. Subjects reported that without the aid of virtual fixturing they had to adopt a move-and-wait strategy to allow the feedback from the remote site to catch up with their kinesthetic sense of peg position. They reported moving in front of the target hole and then waiting until the visual feedback from the remote site confirmed that their position was correct. With

the aid of virtual fixturing, subjects were able to use the overlaid real-time haptic cues in place of the delayed visual cues and perform the task without having to wait for visual confirmation of every action.

Characteristic Trajectory Paths For Peg Insertion Trials

In order to confirm the reported peg insertion strategies given in post testing interviews and gain further insight into how virtual fixtures enhance time delayed teleoperation, subjects were asked to perform a small number of peg insertion trials with and without the aid of virtual fixtures while their hand trajectories were recorded. Figure 9 through Figure 11 present characteristic hand trajectories for a single subject performing a peg insertion task for each of the three time delay configurations. The top half of each plot shows a bird's eye view of the operator's hand trajectory for a single peg insertion trial. The plot depicts a motion in which the peg starts at hole 3, the operator pulls away from the task board, moves across the board, and then inserts the peg into hole 6. The horizontal axis corresponds to motion across the face of the task board and the vertical axis corresponds to distance away from the task board. The bottom half of each plot shows the velocity profile that corresponds to each of the plotted trajectories. Although the plots shown here only represent a small number of trials performed by a single subject, these particular plots were chosen for display from the large number of recorded trajectories because they were typical and representative samples of the total data set.

Figure 9 shows sample trajectories for a subject performing a peg insertion task from hole 3 to hole 6 with no time delay, 250 ms delay, and 450 ms delay. For the no-delay trial, the position and velocity plots show that the subject pulled the peg out of the board, moved it across the board and then slightly hesitated before inserting the peg. For the 250 ms delay trial shown in Figure 9, we see a similar pattern, but the slight hesitation before peg insertion has turned into a substantial pause. This pause before peg insertion is reflected in the velocity profile as the region where the velocity actually drops to almost zero. This result confirms the move-and-wait strategy that subjects reportedly adopted to allow the delayed visual feedback to confirm their kinesthetic operations. For the 450 ms delay trial shown in Figure 9, the

No DELAY

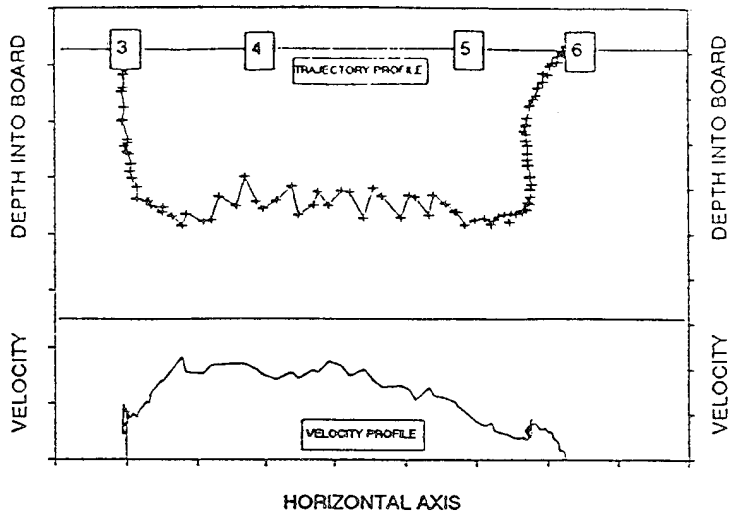

250ms DELAY

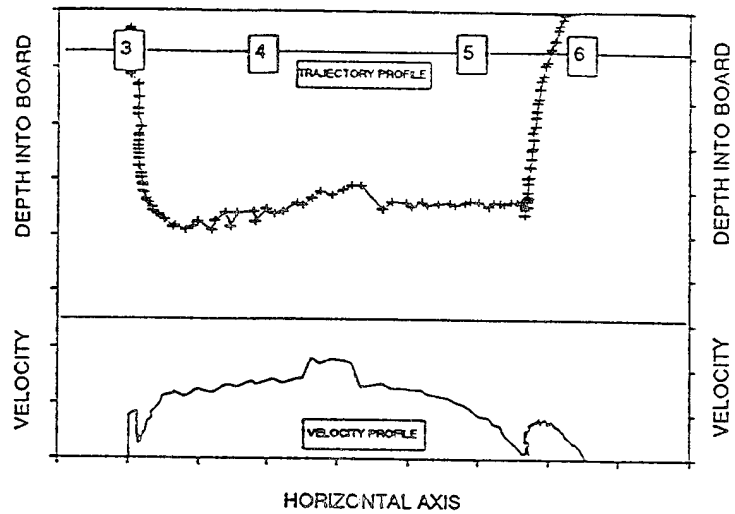

450ms DELAY

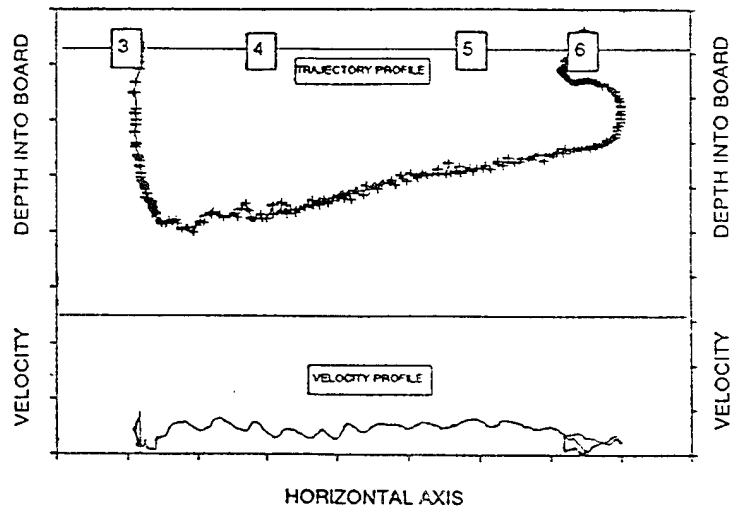

Figure 9. Sample Trajectory Plots for NO FIXTURE Trials Shown for Each Time Delay Period

No DELAY

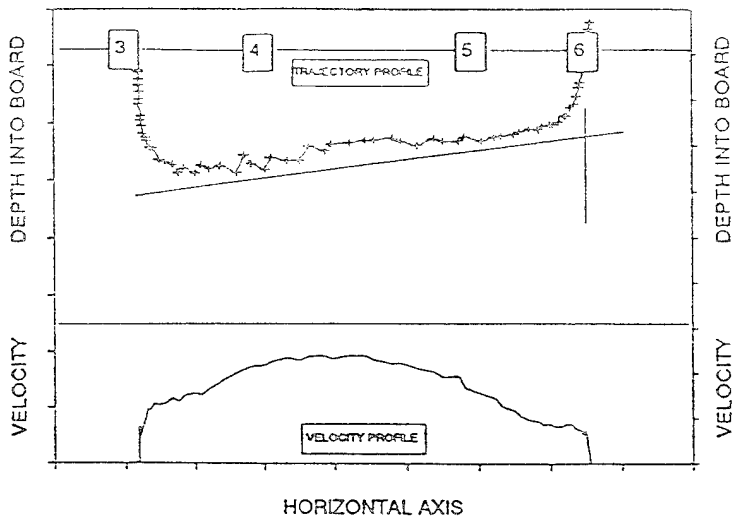

250ms DELAY

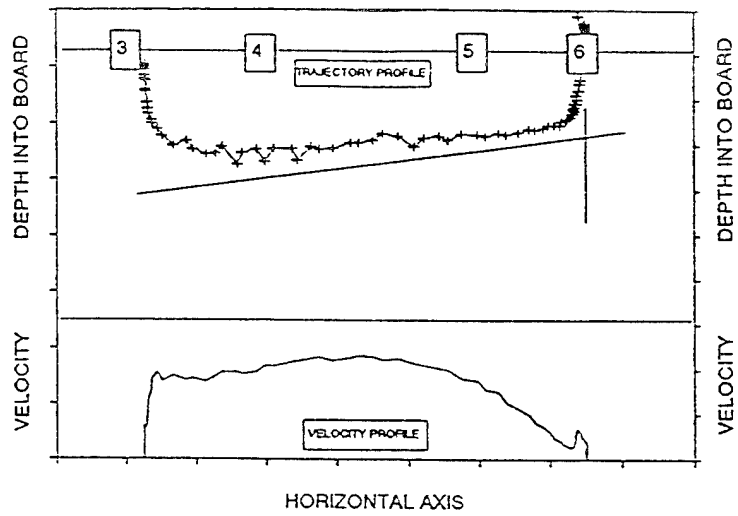

450ms DELAY

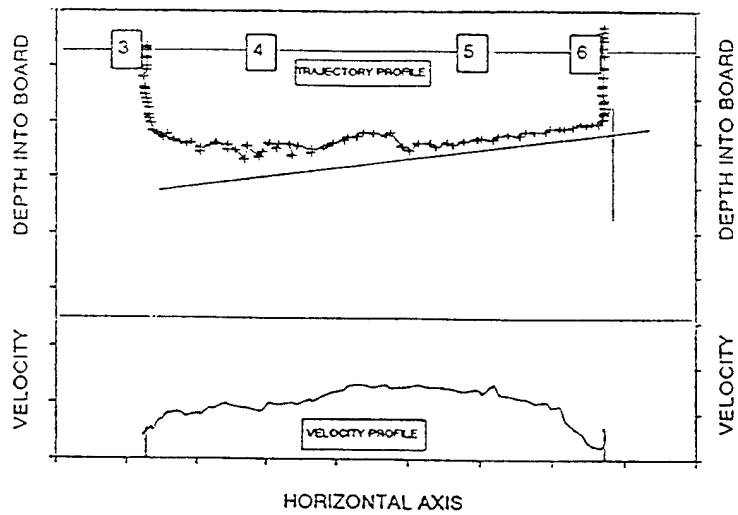

Figure 10. Sample Trajectory Plots for FIXTURE 4 Trials Shown for Each Time Delay Period

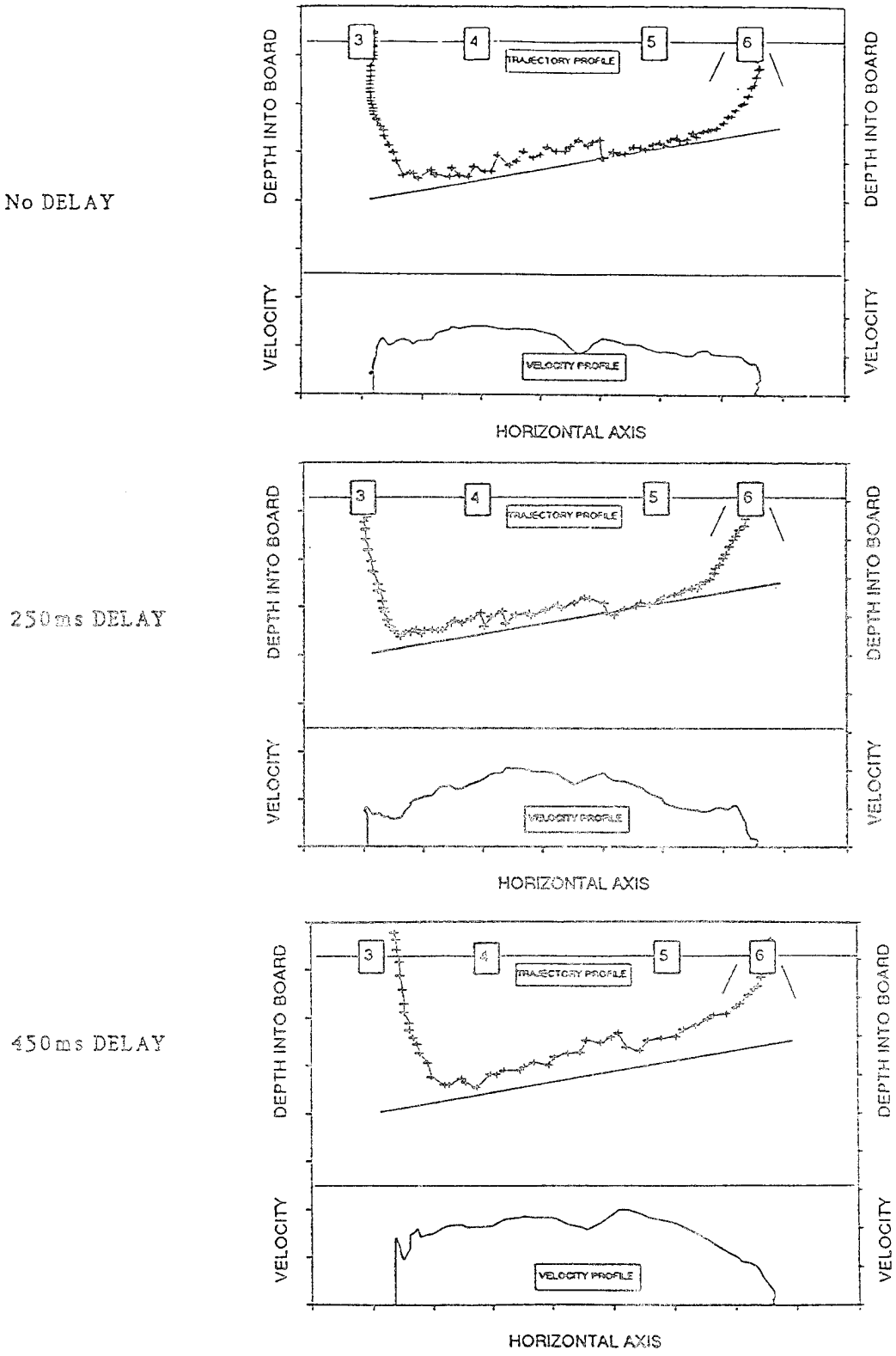

Figure 11. Sample Trajectory Plots for FIXTURE 6 Trials Shown for Each Time Delay Period

pause before peg insertion actually becomes a series of pauses where the subject moves and waits for visual confirmation, then adjusts and waits for visual confirmation, then adjusts again and waits for visual confirmation. The performance degradation in this trial was significant compared to the no-delay trial. If we compare the overall velocity plots of the three time delay scenarios, it is evident that velocity profiles get progressively flatter as the time delay increases. This drop in overall velocity confirms graphically the performance degradation due to the addition of time delay into the telemanipulation task.

Figure 10 shows trajectory plots while using Fixture 4 to perform the peg insertion trials with the same three time delay periods. A sketch of the Fixture 4 surface profile is overlaid on top of this graph to give a rough idea of where interaction with the haptic sensations occurred during the task. Comparing the plots for the three time delay periods, the hesitation before peg insertion is much less pronounced than in the no-fixture trials. This result suggests that subjects were able to use haptic sensations as confirmation of kinesthetic operations and did not have to rely as heavily on visual confirmation. What is more, the flattening of the velocity profile with increased time delay is significantly less pronounced in these trials using Fixture 4 than was observed in the no-fixture trials. This confirms graphically that the performance degradation due to time delay is less when the virtual fixture was provided than in the unaided trials.

Figure 11 shows trajectory plots while using Fixture 6 to perform the peg insertion trials with the same three time delay periods. A sketch of the Fixture 6 surface profile is overlaid on top of this graph to indicate where interaction with the haptic sensations occurred during the task. Comparing the plots for the three time delay periods, we find no indication of hesitation before peg insertion for any of the time delay periods. This suggests that, using virtual Fixture 6, subjects were able to use the haptic sensations in place of visual confirmation to perform the insertion task. Not only do the velocity profiles not flatten out with increasing time delay, but the profiles actually reflect progressively faster trajectories suggesting better performance in the time delay trials than in the no-delay trials when using virtual Fixture 6.

These trajectory plots clearly demonstrate that, for a given subject, the use of a virtual fixture can eliminate the detrimental effects that time delay imparts on telemanipulation.

CONCLUSIONS

The results of this study confirm that overlaying abstract sensory information in the form of *virtual fixtures* on top of the sensory feedback from a remote environment can greatly reduce the drop in performance resulting from time delays in telemanipulation tasks. Without the use of any virtual fixtures, 36% and 44% drops in operator performance were recorded for time delays of 250 ms and 450 ms respectively. Subjects reported adopting a move-and-wait strategy to deal with the time delayed telemanipulation task which was confirmed by the recorded trajectory plots of hand motion. The use of virtual fixtures composed of simple combinations of rigid surfaces were shown to greatly reduce and in some cases completely eliminate the performance degradations due to such time delays. Subjects reported being able to use real-time haptic sensations as perceptual cues in place of time delayed visual cues. As a result, subjects were able to drop their cumbersome move-and-wait technique and perform the task more naturally. The absence of move-and-wait motion was confirmed in the recorded trajectory plots of peg insertion trials with virtual fixtures. Because effective virtual fixtures were developed from basic haptic elements like rigid planar surfaces, the development of an interactive *perceptual workstation* which allows operators to build their own virtual fixtures from basic building blocks seems like a feasible endeavor for time delayed telepresence tasks. Such an interactive workstation could allow a teleoperator to develop powerful virtual fixtures upon first encounter with an unfamiliar telemanipulation task to be performed in a time delay situation.

REFERENCES

[1] Akin, D.L., Minsky, M.L., Thiel, E.D. and Kurtzman, C.R., "Space Applications of Automation, Robotics, and Machine Intelligence Systems (ARAMIS)," Phase II, Vol. 3: Executive Summary, MIT, Cambridge MA, 1983.

[2] Bejczy, A., Kim, W., and Venema, S., "The Phantom Robot: Predictive Displays for Teleoperation with Time Delay," *IEEE Robotics and Automation*, 1990.

[3] Brooks, T., Ince, I., and Lee, G., "Operator Vision Aids for Space Teleoperation Assembly and Servicing," *Space Operations, Applications, and Research Symposium*, 1991.

[4] Ferrell, W.R. and Sheridan, T.B., "Supervisory control of remote manipulation," *IEEE Spectrum 4*, no. 10 October: 81-88.

[5] Ellis, S.R., Pictoral Communication in Virtual and Real Environments, Taylor and Francis, New York NY, 1991.

[6] Ferrel, W.R., Remote Manipulation with Transmission Delay, MIT, NASA TN D-2665, 1965.

[7] Ferrel, W.R., "Delayed Force Feedback," *Human Factors*, 8, 449-455, 1966.

[8] Fitts, P.M., "The Information Capacity of Human Motor Systems in Controlling the Amplitude of a Movement," *Journal Experimental Psychology*, vol 47, pp. 381-391, 1954.

[9] Hannaford, B., "Stability and Performance Trade-Offs in Bilateral Teleoperation," submitted to 1989 IEEE Conf. on Robotics and Automation.

[10] Hashimoto, T., Sheridan, T.B., and Noyes, M.V., "Effects of Predictive Information in Teleoperation with Time Delay," *Japan Journal of Ergonomics*, 22, 2, 1986.

[11] Held, R. and Durlach, N., "Telepresence, time delay and adaptation," in NASA Conference Publ. 10032, 1987.

[12] Hill, J.W., "Study of Modeling and Evaluation of Remote Manipulation Tasks with Force Feedback," Final Report, SRI Project 7696, JPL Contract 95-5170, 1979.

[13] Johnsen, E.G. and Corliss, W.R., "Teleoperators and Human Augmentation," NASA SP-5047, pp. 72, 1967.

[14] Kim, W., Tendick, F., and Stark, L., "Visual Enhancements in Pick and Place Tasks: Human Operators Controlling a Simulated Cylindrical Manipulator," *IEEE Journal of Robotics and Automation*, RA-3, 1987 (b).

[15] Kotoku, T., "Predictive Display with Force Feedback and Its Application to Remote Manipulation System with Transmission Time Delay,"

Proceedings IEEE International Conference on Intelligent Robotics and Systems, 1992.

[16] MB Associates, Operations and Maintenance Manual. Manipulator Arms Systems, April 1976.

[17] Massimino, M. and Sheridan, T.B., "Variable force and visual feedback effects on teleoperator man-machine performance," in *Proceedings of NASA Conference on Space Telerobotics*, Pasadena CA, 1989.

[18] Noyes, M.V., and Sheridan, T.B., "A Novel Predictor for Telemanipulation Through a Time Delay," *Proceedings of 20th Annual Conference on Manual Control*, NASA Ames Research Center, Moffet Field CA, 1984.

[19] Oxenberg, S., Landell, B. and Kan, E., "Geometric Database Maintenance Using CCTV Cameras and Overlay Graphics," *SPIE*, Vol. 1006, Space Station Automation IV, 1988.

[20] Paul, R., Lindsay, T., and Sayers, C., "Time Delay Insensitive Teleoperation," *Proceedings of IEEE International Conference on Intelligent Robotics and Systems*, 1992.

[21] Pepper, R.L. and Hightower, J.D., "Research Issues in Teleoperator Systems," 28th Annual Human Factors Society Meeting, San Antonio TX, 1984.

[22] Pepper, R.L. and Kaomea, P.K., "Teleoperation: Telepresence and Performance Assessment," Annual International Ergonomics Society Meeting, Teleoperation and Control, July 1988.

[23] Remis, S.J., and Repperger, D.W., "Quantifying Performance Degradation Due to the Human-Machine Interface of Telemanipulators," AAMRL-SR-90-510, December 1990.

[24] Repperger, D.W., and Goodyear, C., "Active Controllers and Time Duration to Learn a Task," Conference on Manual Control, 1985.

[25] Repperger, D.W., Remis, S.J., and Merrill, G., "Performance Measures of Teleoperation Using an Exoskeleton Device," *Proceedings of IEEE International Conference on Robotics and Automation*, vol 1, pp. 552-557, 1990.

[26] Rosenberg, L.B., "The Use of Virtual Fixtures As Perceptual Overlays to Enhance Operator Performance in Remote Environments," AL/CF-TR-1994-0089, September 1992.

[27] Russell, R. and D'Arcy, A., "Video-Based Satellite Attitude Determination," *SPIE*, vol 729, Space Station Automation II, 1986.

[28] Sheridan, T., "Human Supervisory Control of Robot Systems," *IEEE Robotics and Automation*, vol 2, 1986.

[29] Sheridan, T., "Telerobotics," *Automatica*, 25(4), 1989.

[30] Sheridan, T.B. and Ferrell, W.R., Man-Machine Systems, The MIT Press, 1981.

[31] Spain, Edward H., "Peg-In-Hole Taskboard Documentation," Final Report for Task FQ7624-88-00024, March 1989.

[32] Stark, L., et al., "Telerobotics: Display, Control, and Communications Problems," *IEEE Robotics and Automation*, 1989.

[33] Thompson, D.A., "The Development of a Six Degree of Freedom Robot Evaluation Test," *Proceedings of 13th Annual Conference on Manual Control*, MIT, Cambridge MA, 1977.

Addendum:

Photo: Virtual Fixtures Project (augmented reality research 1993)

Footnote: the Virtual Fixtures project was funded by the Air Force Office of Scientific Research and is therefore public domain. The research was conducted at Stanford, Air Force Research Laboratory (Armstrong Lab), and NASA Ames Research Center between 1991 and 1994. The objective of the Virtual Fixtures effort was to research whether it was possible to incorporate interactive virtual objects (called "virtual fixtures") into a user's perception of real workspaces. This concept later became commonly referred to as augmented reality (AR) or mixed reality (MR). The project produced the first interactive augmented reality system, enabling users to engage 3D virtual objects overlaid on their perception of a real environment.

U. S. Government Printing Office 1995 650-075/00085